NBS ROTARY CONTROL VALVES

SS 311E

3 MILLION CYCLES CONTINUOUS OPERATION !

OPEN/CLOSE SPEED IS WITHIN 1 SECOND !

NO LEAKAGE WITH 750,000 CYCLES !

Patent Registered

ROTARY CONTROL VALVE UNIFLOW for PSA/VSA

As Switching Valves for PSA/VSA Application
Standard Type and Anti-Vibration Type

ANSI Class 150 / PN 10

with UNIPOWER NS type

Automated On/Off, Throttling Control

with UNIPOWER NC Type

JAB CM007

ISO 9001 99QR·226

UNIFLOW is not a Butterfly Valve.
It is a Rotary Valve.

By making use of the sealing principle of a ball valve it became much more compact and lighter. In addition to that, by employing the double eccentricity construction that insures a long sealing life and the unique sealing design that allows bi-directional sealing, the High Performance Rotary Valve UNIFLOW has been realized that is superior in economical point of view too.

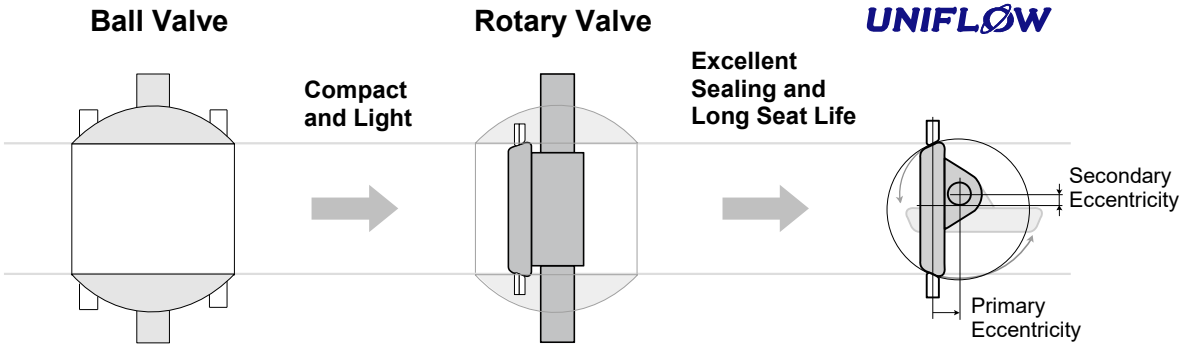

Contents

UNIFLOW Construction 2

UNIFLOW- Valve Standard Specifications (Standard Type, Anti-Vibration Type) 3

UNIFLOW Flow Characteristics 4

Actuator Selection Table for UNIFLOW 5

Outer Dimensions of UNIFLOW with UNIPOWER

- ANSI Class 150/PN10, Wafer type, with Double acting, 2"-48"(50mm-1200mm) 6
- ANSI Class 150/PN10, Wafer type, with Spring return (FO), 2"-48"(50mm-1200mm) 7
- ANSI Class 150/PN10, Wafer type, with Spring return (FC), 2"-48"(50mm-1200mm) 8

Piping Positions and Installation of UNIPOWER + UNIFLOW 9-16

UNIPOWER - Actuator Standard Specifications with Accessories 17

UNIPOWER (Construction, Dimensions, Performance) 18-21

Instructions for Piping 22

Maintenance and Seal Kits 23-24

How to order UNIFLOW 25

UNIFLOW - Construction

■**Standard Type**(Valve Size 2" - 48" / 50mm - 1200mm)

● **Double Sealing Construction at the Gland part**
The Gland packings are common for vacuum service and positive pressure. Furthermore, the sealing life is prolonged by employing the double *O-rings*.

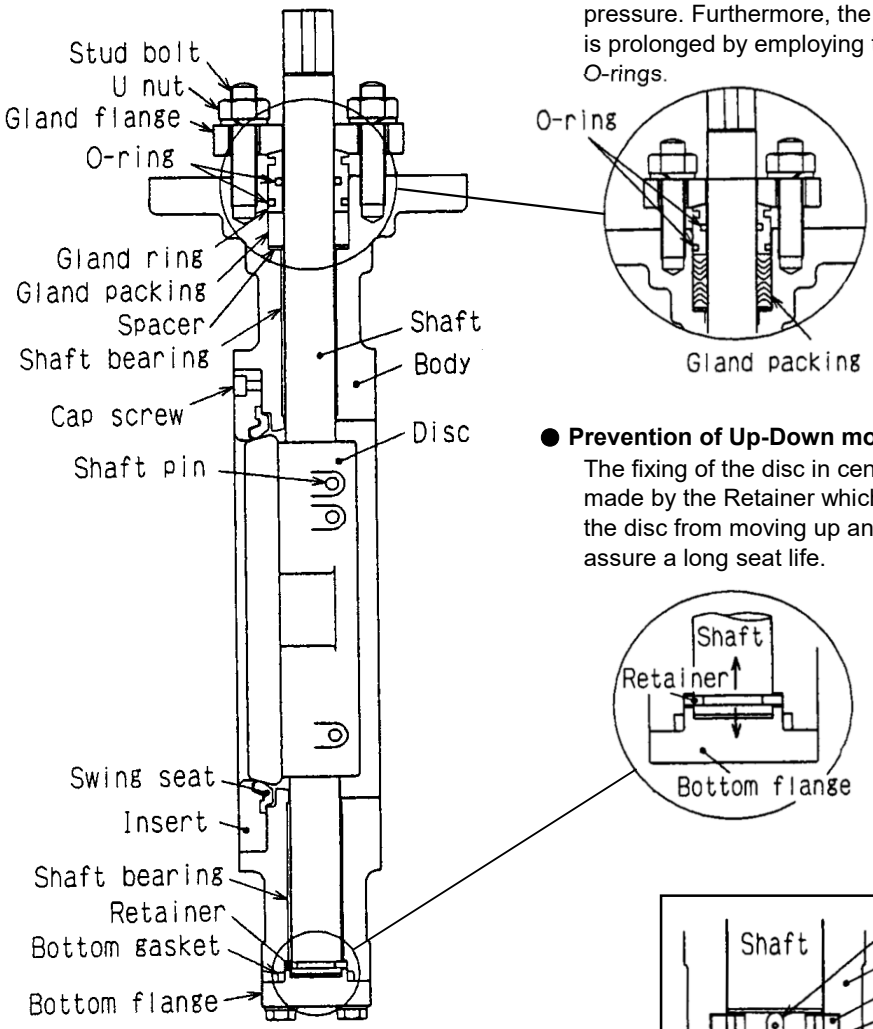

For sizes 2"-36"(50mm-900mm)

● **Prevention of Up-Down movement of the Disc**
The fixing of the disc in center is made by the Retainer which prevents the disc from moving up and down to assure a long seat life.

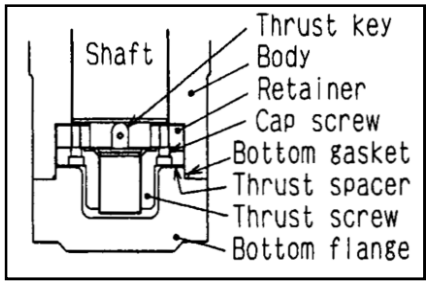

For sizes 40"-48"(1000mm-1200mm)

■**Anti-Vibration Type**(Valve Size 6" - 24" / 150mm - 600mm)

1. Application

To be applied to the switching valves at piping conditions around the vacuum pumps where a lot of vibration and wet conditions are at present.

2. Features

In addition to the construction features of the standard type this type is designed not to be affected by vibration and wet conditions so that abrasion and damage at the thrusting part of the shaft shall be avoided.

UNIFLOW - Valve Standard Specifications

Connection : Wafer Type, {Lugged Type(※)}

For PSA/VSA

Type	Standard Type		Anti-Vibration Type
Rating	ANSI Class 150 / PN10		
Size	2"(50mm) - 24"(600mm)	26"(650mm) - 48"(1200mm)	6"(150mm) - 24"(600mm)
Face to Face	ISO 5752/short / API 609 table 1 / DIN 3202 K1		
Bonnet flange	ISO 5211-1		

Material

Body	A536 or WCB	A536 or WCB	A536 or WCB
Disc	304ss/hard chrome plated (2" - 12"/50mm-300mm) 304ss or WCB/hard chromeplated (14"-24"/350mm-600mm)	304ss/hard chrome plated or WCB/hard chrome plated	304ss/hard chrome plated (6" - 12"/150mm-300mm) 304ss or WCB/hard chrome plated (14"-24"/350mm-600mm)
Shaft	316ss(2"-10"/50mm-250mm) 304ss(12"-24"/300mm-600mm)	304ss	316ss(6"-10"/150mm-250mm) 304ss(12"-24"/300mm-600mm)
Seat	PTFE		
Gland packing	PTFE / for Vacuum service with O-Rings(NBR)		
Seal	Bottom gasket : PTFE		
Shaft bearing	R-PTFE/316ss		
Gland flange	S25C(Steel)		
Bottom flange	S25C(Steel)		304ss
Sub-bearing	-		Oilless
Key	-		S45C(Steel)
Grease used	DG203(Gland part and Bottom part only)		

Temperature Range	-49°F ～ +356°F（ -45℃ ～ +180℃ ）
Max. Differential Pressure	145psi / 1.0MPa
Leakage	Tight shut(No Leakage) = Bi-directionally
Open/Close Speed	Within 1 second(However, for sizes larger than 26"(650mm) to be consulted to us.)
Flow Characteristics	Nearly Equal Percent
Rangeability On/Off	Valve Opening Degree : 10° ～ 90° = 1 : 40 / 10° ～ 60° = 1 : 20
Oil free/water free	Yes
Painting on Body	Internal/external Primary Rust Preventive: Premer(Premite S-200), External: Final coating(Lacquer Silver) No painting on Stainless steel Special painting : Upon Request

(※) : Consult us before placing orders.

Flow Characteristics

(1) Characteristics diagram (with On/Off disc)

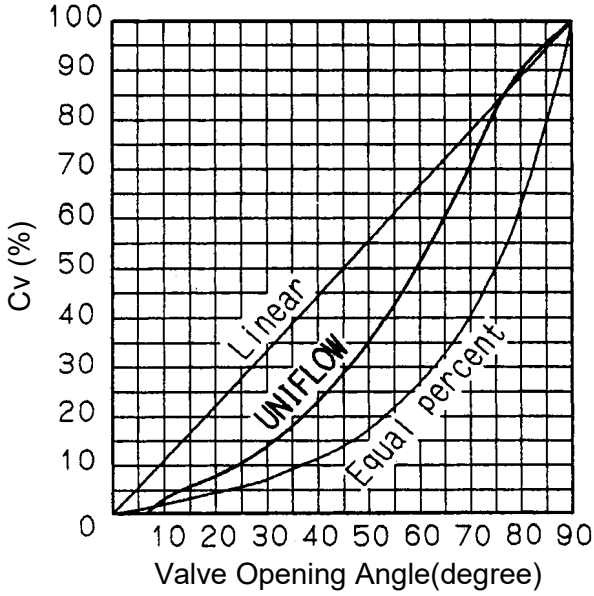

(2) Rangeability (with On/Off disc)

Valve Opening Angle	10° ～	90°	=	1	: 40
Valve Opening Angle	10° ～	60°	=	1	: 20

(3) For controlling opening position

(example)

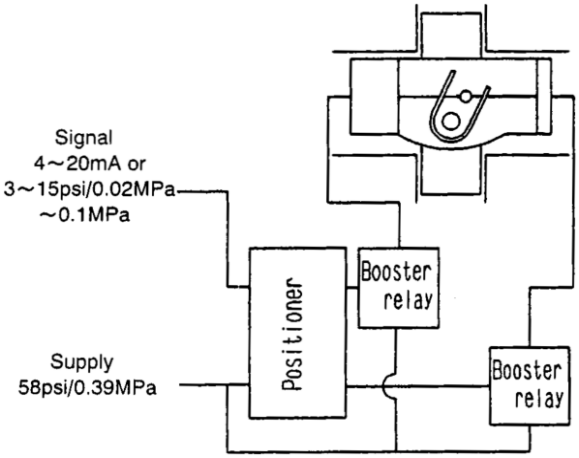

Signal		Valve opening	Speed	Flow Control Cv(%)
0%	4mA, 3psi/0.02MPa	0°(Fully closed)		0
50%	12mA, 9psi/0.06MPa	45°(First stage open)	within 3 seconds	28
100%	20mA, 15psi/0.1MPa	90° (Second stage open)	within 3 seconds(*)	100

(*): Fully close ←→ fully open within 6 seconds

UNIFLOW for PSA/VSA application can be controlled in rapid multi-step operation by installing the positioner on the actuator.

Actuator(UNIPOWER) Selection Table

UNIFLOW for PSA/VSA Application

(selected at Δ P=71psi or 0.49MPa , Supply air pressure=58psi or 0.39MPa)

Valve size	2"	2.1/2"	3"	4"	5"	6"	8"	10"	12"	14"	16"	18"
	50	65	80	100	125	150	200	250	300	350	400	450
Bonnet F No.	F10	F10	F10	F10	F10	F10	F14	F14	F14	F14	F16	F16
On-off, Double acting	NC092P				NC202P			NC352P	NS-13N			NS-17N
On-off, Spring return	NE201S FO						NB-13NS FO,FC		NS-17NS FO,FC		NS-20NS FO,FC	
	NE201S FC					NE351S FC						
Gas Control, Double acting	NC092P				NC202P		NC352P		NS-13N		NS-17N	
Gas Control, Spring return	NE201S FO				NE351S FO		NS-13NS FO,FC	NS-17NS FO,FC		NS-20NS FO,FC		
	NE201S FC				NE351S FC							

Valve size	20"	22"	24"	26"	28"	30"	32"	34"	36"	40"	44"	48"
	500	550	600	650	700	750	800	850	900	1000	1100	1200
Bonnet F No.	F16	F25	F25	F25	F25L	F25L	F25L	F25L	F25L	F25L	F30	F30
On-off, Double acting	NS-17N		NS-20N					NS-28N				
On-off, Spring return	NS-20NS FO,FC	NS-28NS FO,FC						NS-38NS FO,FC				
Gas Control, Double acting	NS-17N	NS-20N					NS-28N					ALD-280
Gas Control, Spring return	NS-20NS FO,FC	NS-28N FO,FC					NS-38NS FO,FC					

FO : Supply air failure, valve open

FC : Supply air failure, valve close

Outer Dimensions - UNIFLOW with UNIPOWER(Double Acting)

On/Off Application(PSA/VSA)

ANSI Class 150 2" ~ 24"
PN10 50mm ~ 600mm

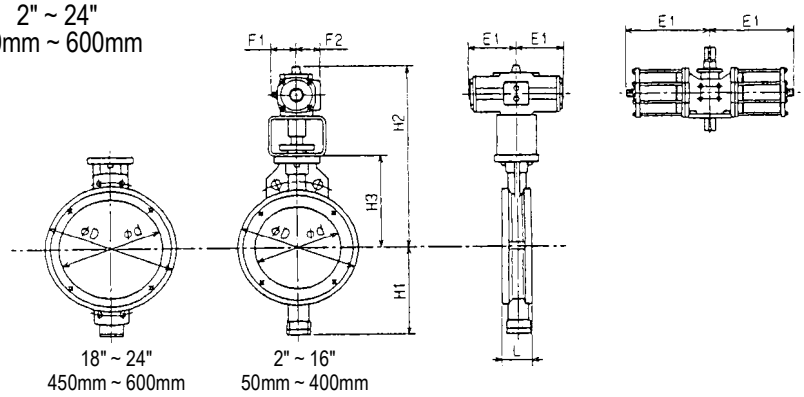

ANSI Class 150 26" ~ 48"
PN10 650mm ~ 1200mm

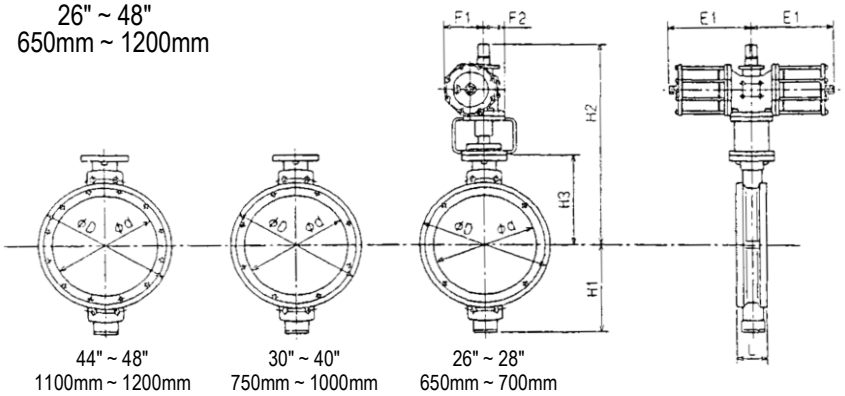

1. UNIPOWER is selected at max. differential pressure 0.39MPa(4bar)/58psi.
2. The same selection applies for both Standard type and Anti-Vibration type.
3. Under "H1", "Std" means Standard type, "Anti" means Anti-Vibration.

(Unit: mm)

Size (mm)	L	d	D	H1 Std	H1 Anti	H2	H3	E1	F1	F2	UNIPOWER	weight (Kg)
50	43	49	102	99		325	105	103	55	52	NC092P	21
65	46	65	122	112		340	120	103	55	52	NC092P	22
80	46	78	132	120		350	130	103	55	52	NC092P	22
100	52	100	156	131		372	152	103	55	52	NC092P	24
125	56	121	188	159		416	170	130	73	63	NC202P	32
150	56	142	216	170	195	426	180	130	73	63	NC202P	36
200	60	192	268	210	235	511	215	130	73	63	NC202P	45
250	68	238	326	237	249	576	250	160	90	74	NC352P	64
300	78	280	375	278	292	667	275	305	134	66	NS-13N	94
350	78	320	420	316	336	707	315	305	134	66	NS-13N	105
400	102	365	482	362	387	802	360	305	134	66	NS-13N	144
450	114	420	538	387	412	915	385	375	176	95	NS-17N	209
500	127	470	592	432	456	645	415	375	176	95	NS-17N	237
600	154	550	694	506	527	1120	475	525	232	115	NS-20N	378
650	165	612	740	524		1147	502	525	232	115	NS-20N	458
700	165	655	800	584		1245	555	525	232	115	NS-20N	516
750	190	698	857	614		1275	585	525	232	115	NS-20N	563
800	190	757	914	628		1308	618	525	232	115	NS-20N	624
900	203	870	1005	688		1493	673	675	301	158	NS-28N	885
1000	216	967	1110	847		1560	740	675	301	158	NS-28N	1063
1100	241	1064	1220	877		1660	770	675	301	158	NS-28N	1235
1200	254	1164	1330	957		1740	850	675	301	158	NS-28N	1382

Outer Dimensions - UNIFLOW with UNIPOWER(Spring Return)

On/Off Application(PSA/VSA) for FO(Fail Open)

ANSI Class 150 2" ~ 24"
PN10 50mm ~ 600mm

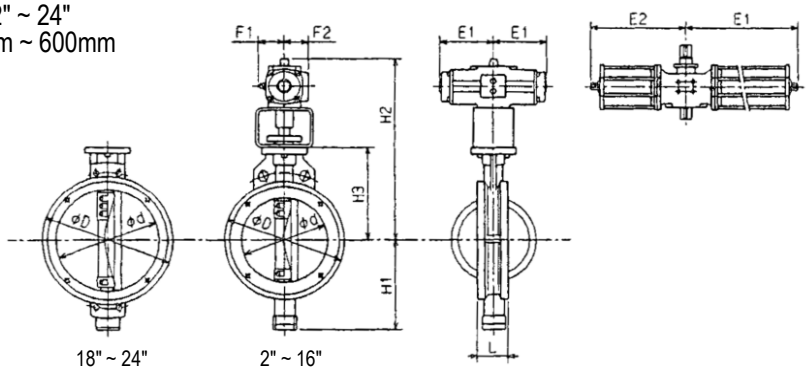

18" ~ 24"
450mm ~ 600mm

2" ~ 16"
50mm ~ 400mm

ANSI Class 150 26" ~ 48"
PN10 650mm ~ 1200mm

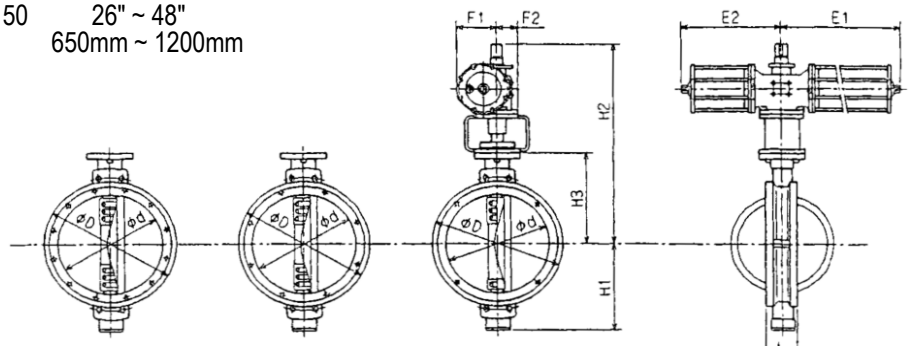

44" ~ 48"
1100mm ~ 1200mm

30" ~ 40"
750mm ~ 1000mm

26" ~ 28"
650mm ~ 700mm

1. UNIPOWER is selected at max. differential pressure 0.39MPa(4bar)/58psi.
2. The same selection applies for both Standard type and Anti-Vibration type.
3. Under "H1", "Std" means Standard type, "Anti" means Anti-Vibration.

(Unit : mm)

Size (mm)	L	d	D	H1 Std	H1 Anti	H2	H3	E1	E2	F1	F2	UNIPOWER	weight (Kg)
50	43	49	102	99		351	105	150		73	63	NE201S-FO	27
65	46	65	122	112		366	120	150		73	63	NE201S-FO	28
80	46	78	132	120		376	130	150		73	63	NE201S-FO	28
100	52	100	156	131		398	152	150		73	63	NE201S-FO	30
125	56	121	188	159		416	170	150		73	63	NE201S-FO	33
150	56	142	216	170	196	426	180	150		73	63	NE201S-FO	37
200	60	192	268	210	235	607	215	547	318	134	66	NS-13NS-FO	89
250	68	238	326	237	249	642	250	547	318	134	66	NS-13NS-FO	99
300	78	280	375	278	301	805	275	610	373	176	95	NS-17NS-FO	166
350	78	320	420	316	336	845	315	610	373	176	95	NS-17NS-FO	177
400	102	365	482	362	387	961	360	887	525	232	115	NS-20NS-FO	298
450	114	420	538	387	412	986	385	887	525	232	115	NS-20NS-FO	324
500	127	470	592	432	456	1016	415	887	525	232	115	NS-20NS-FO	352
600	154	550	694	506	527	1225	475	1155	673	301	158	NS-28NS-FO	638
650	165	612	740	524		1252	502	1155	673	301	158	NS-28NS-FO	718
700	165	655	800	584		1375	555	1155	673	301	158	NS-28NS-FO	776
750	190	698	857	614		1405	585	1155	673	301	158	NS-28NS-FO	823
800	190	757	914	628		1438	618	1155	673	301	158	NS-28NS-FO	884
900	203	870	1005	688			673						
1000	216	967	1110	847			740						
1100	241	1064	1220	877			770						
1200	254	1164	1330	957			850						

Outer Dimensions - UNIFLOW with UNIPOWER(Spring Return)

On/Off Application(PSA/VSA) for FC(Fail Close)

ANSI Class 150 2" ~ 24"
PN10 50mm ~ 600mm

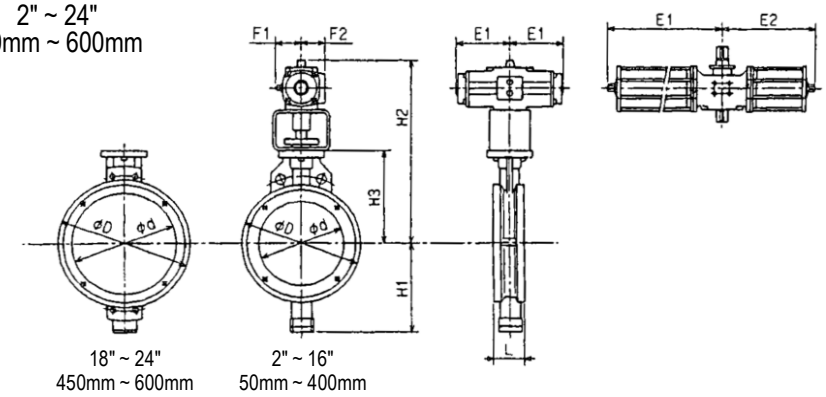

ANSI Class 150 26" ~ 48"
PN10 650mm ~ 1200mm

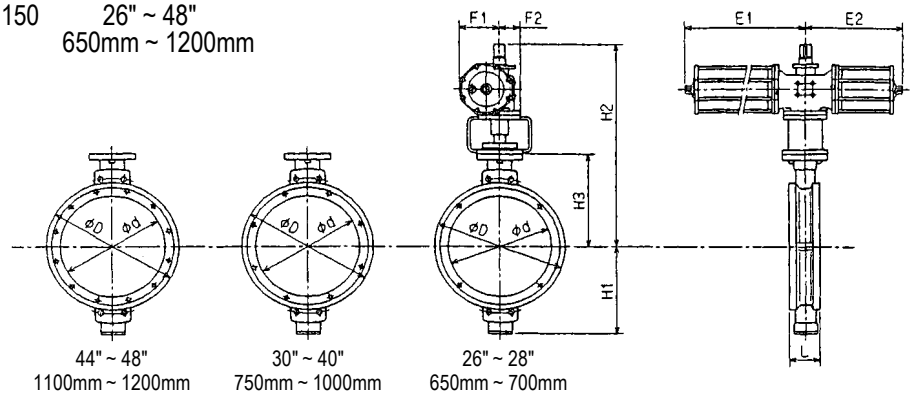

1. UNIPOWER is selected at max. differential pressure 0.39MPa(4bar)/58psi.
2. The same selection applies for both Standard type and Anti-Vibration type.
3. Under "H1", "Std" means Standard type, "Anti" means Anti-Vibration.

(Unit: mm)

Size (mm)	L	d	D	H1 Std	H1 Anti	H2	H3	E1	E2	F1	F2	UNIPOWER	weight (Kg)
50	43	49	102	99		351	105	150		73	63	NE201S-FC	27
65	46	65	122	112		366	120	150		73	63	NE201S-FC	28
80	46	78	132	120		376	130	150		73	63	NE201S-FC	28
100	52	100	156	131		398	152	150		73	63	NE201S-FC	30
125	56	121	188	159		416	170	150		73	63	NE201S-FC	33
150	56	142	216	170	196	456	180	182		90	74	NC351S-FC	46
200	60	192	268	210	235	607	215	547	318	134	66	NS-13NS-FC	89
250	68	238	326	237	249	642	250	547	318	134	66	NS-13NS-FC	99
300	78	280	375	278	301	805	275	610	373	176	95	NS-17NS-FC	166
350	78	320	420	316	336	845	315	610	373	176	95	NS-17NS-FC	177
400	102	365	482	362	387	961	360	887	525	232	115	NS-20NS-FC	298
450	114	420	538	387	412	986	385	887	525	232	115	NS-20NS-FC	324
500	127	470	592	432	456	1016	415	887	525	232	115	NS-20NS-FC	352
600	154	550	694	506	527	1225	475	1155	673	301	158	NS-28NS-FC	638
650	165	612	740	524		1252	502	1155	673	301	158	NS-28NS-FC	718
700	165	655	800	584		1375	555	1155	673	301	158	NS-28NS-FC	776
750	190	698	857	614		1405	585	1155	673	301	158	NS-28NS-FC	823
800	190	757	914	628		1438	618	1155	673	301	158	NS-28NS-FC	884
900	203	870	1005	688			673						
1000	216	967	1110	847			740						
1100	241	1064	1220	877			770						
1200	254	1164	1330	957			850						

Piping Positions and Installation of UNIPOWER

Code **S** **S** **V3**

- UNIPOWER installation position
- Valve axis position or up-,down flow(S : axis horizontal, E : axis vertical, A : up flow, D : down flow)
- Piping (S : horizontal, E : vertical)

NC/NE Type Actuators (Double acting, Spring return) Unless otherwise specified, our "Standard" applies.

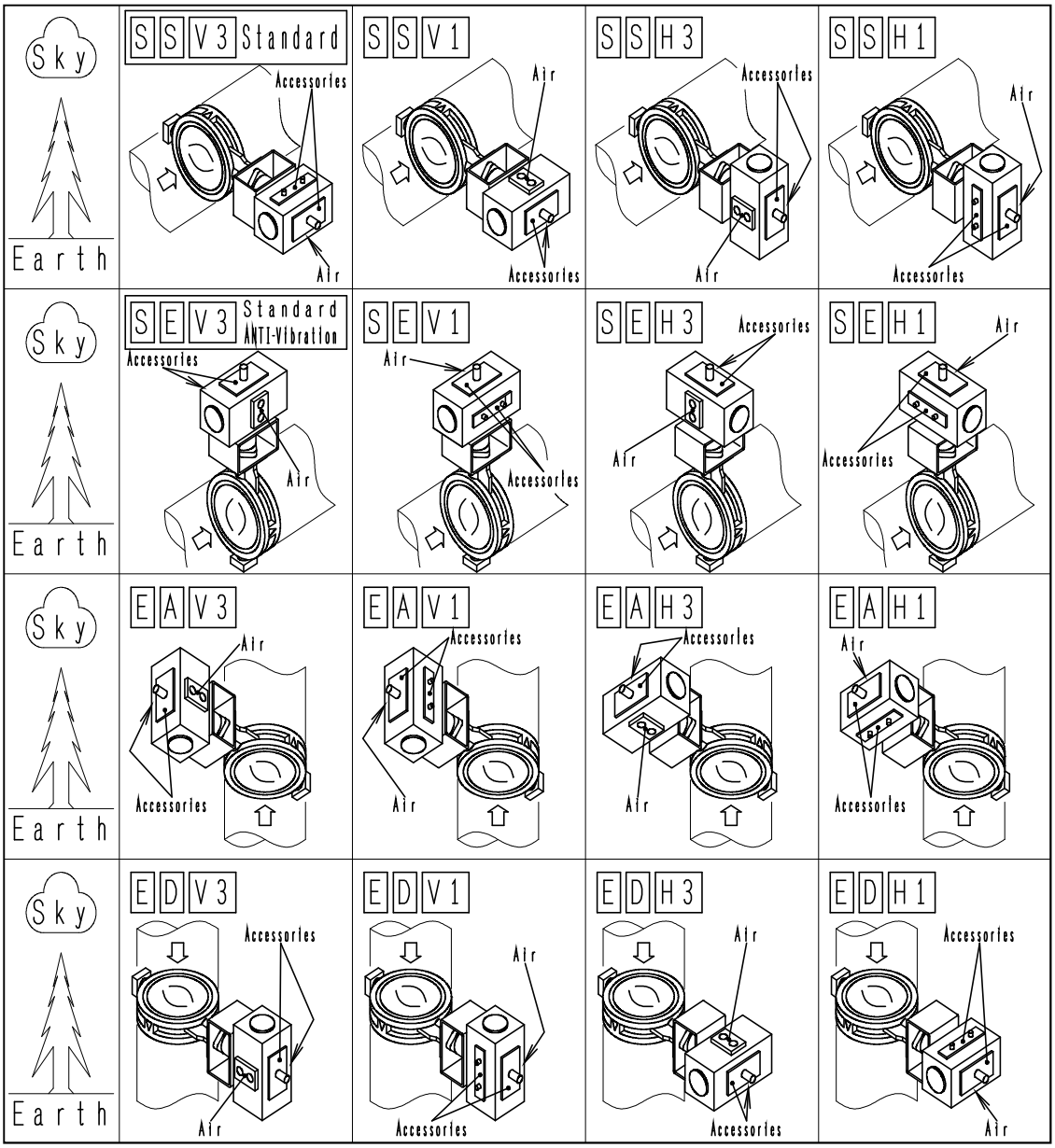

Piping Positions and Installation of UNIPOWER

Code **S** **S** **V3**

- UNIPOWER installation position
- Valve axis position or up-,down flow(S : axis horizontal, E : axis vertical, A : up flow, D : down flow)
- Piping (S : horizontal, E : vertical)

NS Type Actuators(Double acting) Unless otherwise specified, our "Standard" applies.

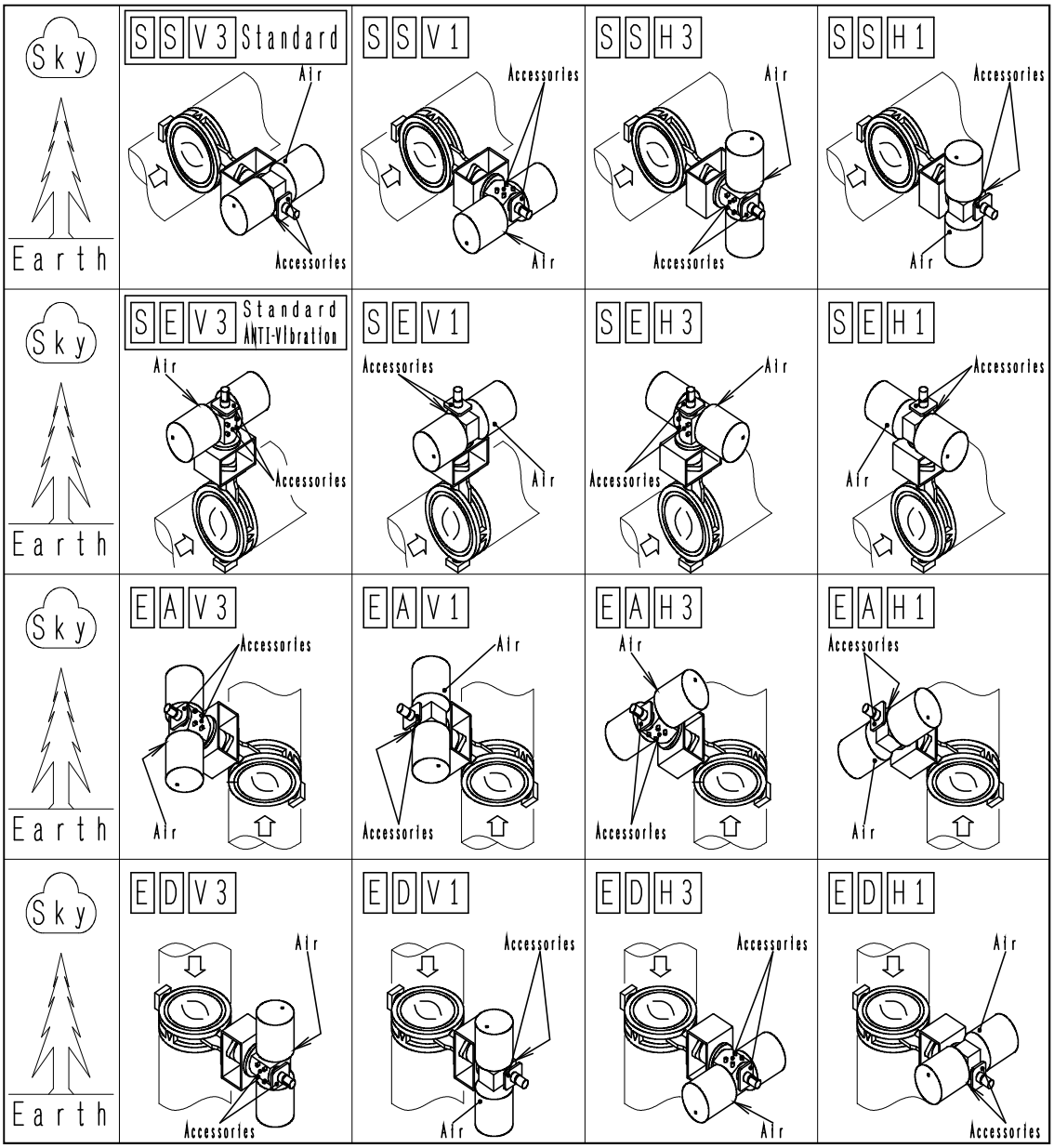

Piping Positions and Installation of UNIPOWER

Code **S** **S** **V3**

- UNIPOWER installation position
- Valve axis position or up-,down flow(S : axis horizontal, E : axis vertical, A : up flow, D : down flow)
- Piping (S : horizontal, E : vertical)

NS Type Actuators(Spring return) - for FC function(Air failure, valve close)

Unless otherwise specified, our "Standard" applies.

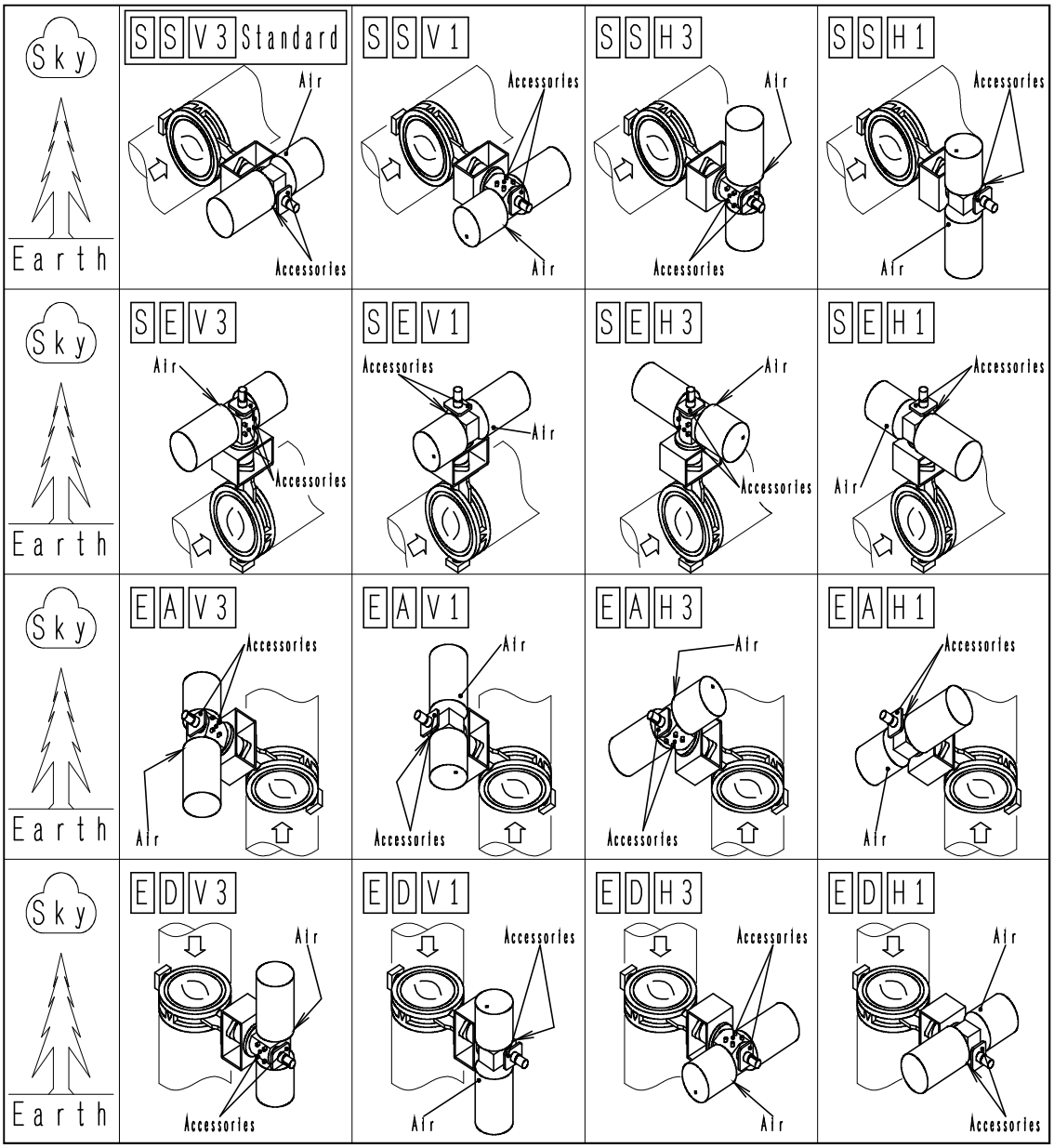

Piping Positions and Installation of UNIPOWER

Code **S** **S** **V4**

- UNIPOWER installation position
- Valve axis position or up-,down flow(S : axis horizontal, E : axis vertical, A : up flow, D : down flow)
- Piping (S : horizontal, E : vertical)

NS Type Actuators(Spring return) - for FO function(Air failure, valve open)

Unless otherwise specified, our "Standard" applies.

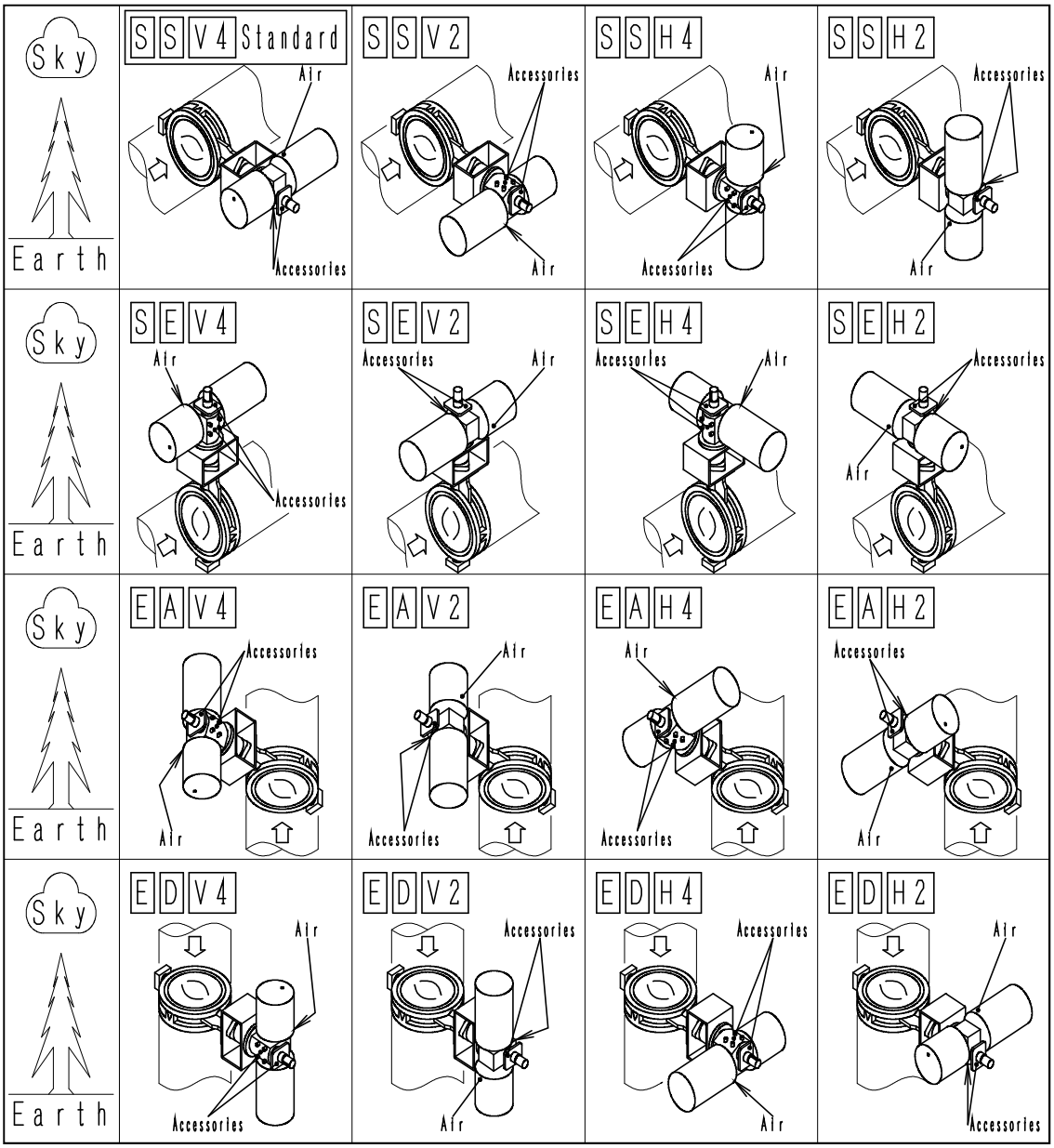

Piping Positions and Installation of UNIPOWER

Cylinder Type :

Tag No. of Valves

☐ ☐ V3 :

☐ ☐ V1 :

☐ ☐ H3 :

☐ ☐ H1 :

NC/NE Type Actuators(Double acting, Spring return) ***With Positioner***

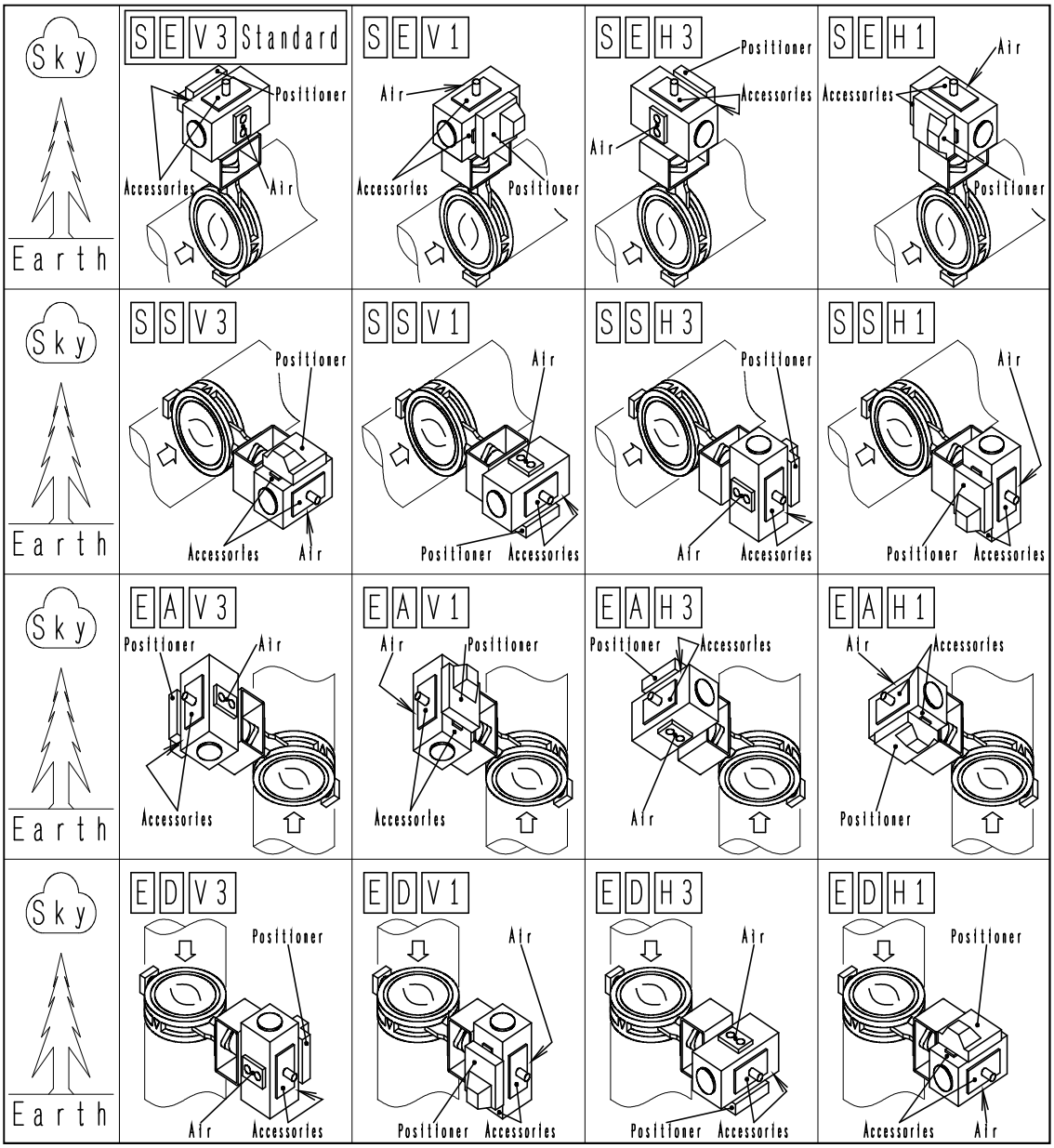

Piping Positions and Installation of UNIPOWER

Cylinder Type :

Tag No. of Valves

☐ ☐ V3 :

☐ ☐ V1 :

☐ ☐ H3 :

☐ ☐ H1 :

NS Type Actuators(Double acting) ***With Positioner***

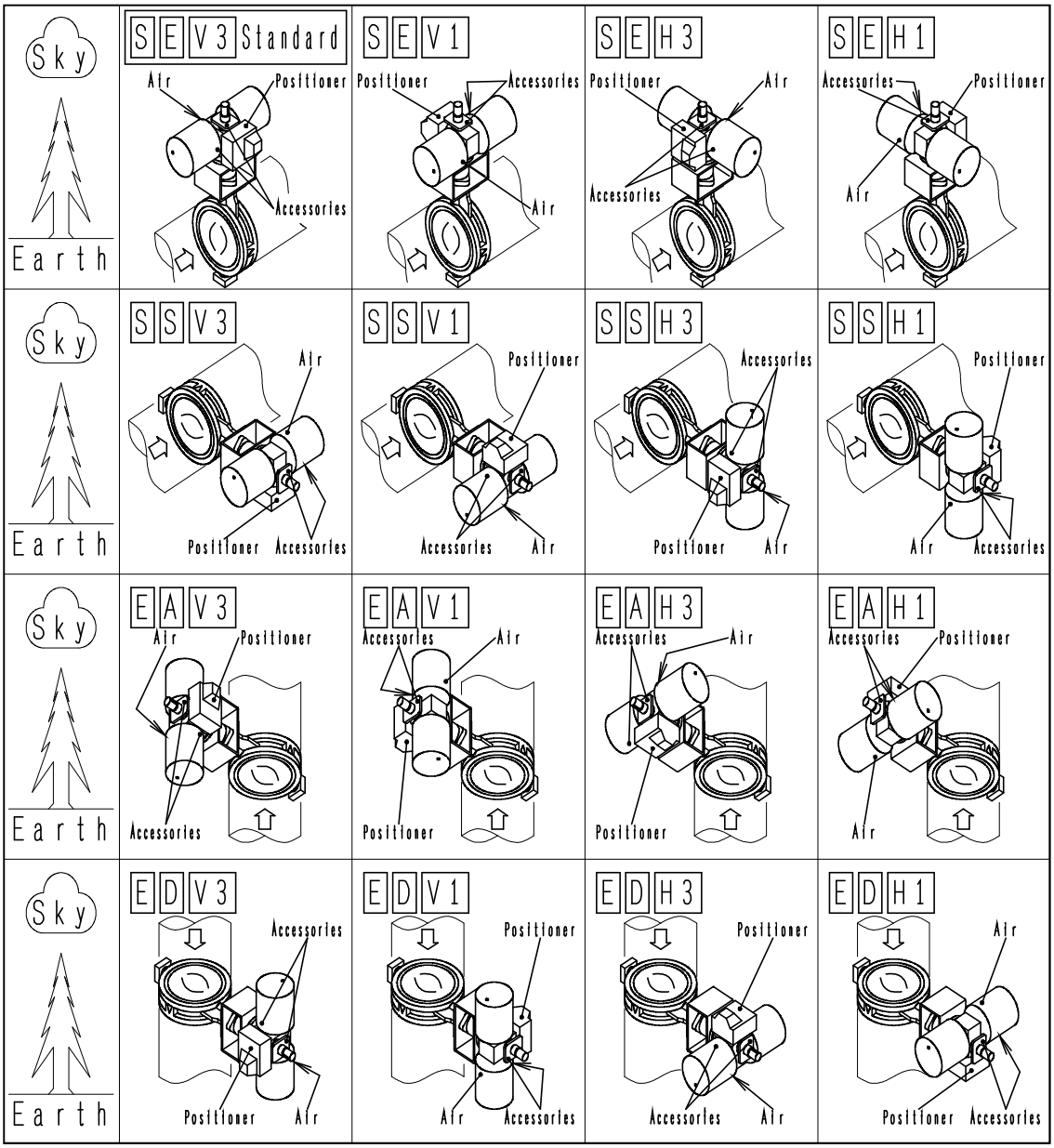

Piping Positions and Installation of UNIPOWER

Cylinder Type :

Tag No. of Valves

☐ ☐ V3 :

☐ ☐ V1 :

☐ ☐ H3 :

☐ ☐ H1 :

NS Type Actuators(Spring return) - for FC function(Air failure, valve close), ***With Positioner***

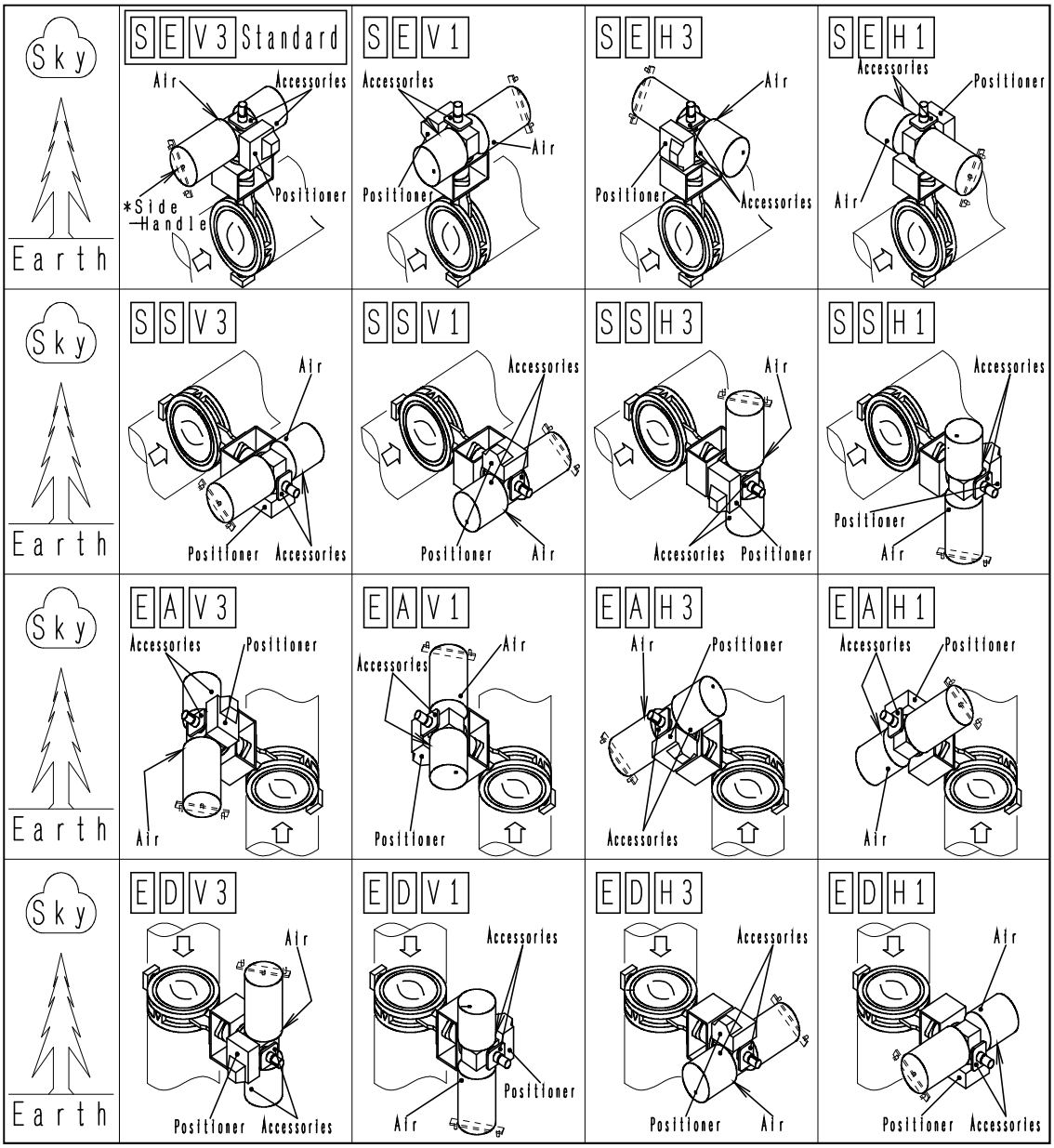

Piping Positions and Installation of UNIPOWER

Cylinder Type :

Tag No. of Valves

☐ ☐ V4 :

☐ ☐ V2 :

☐ ☐ H4 :

☐ ☐ H2 :

NS Type Actuators(Spring return) - for FO function(Air failure, valve open), ***With Positioner***

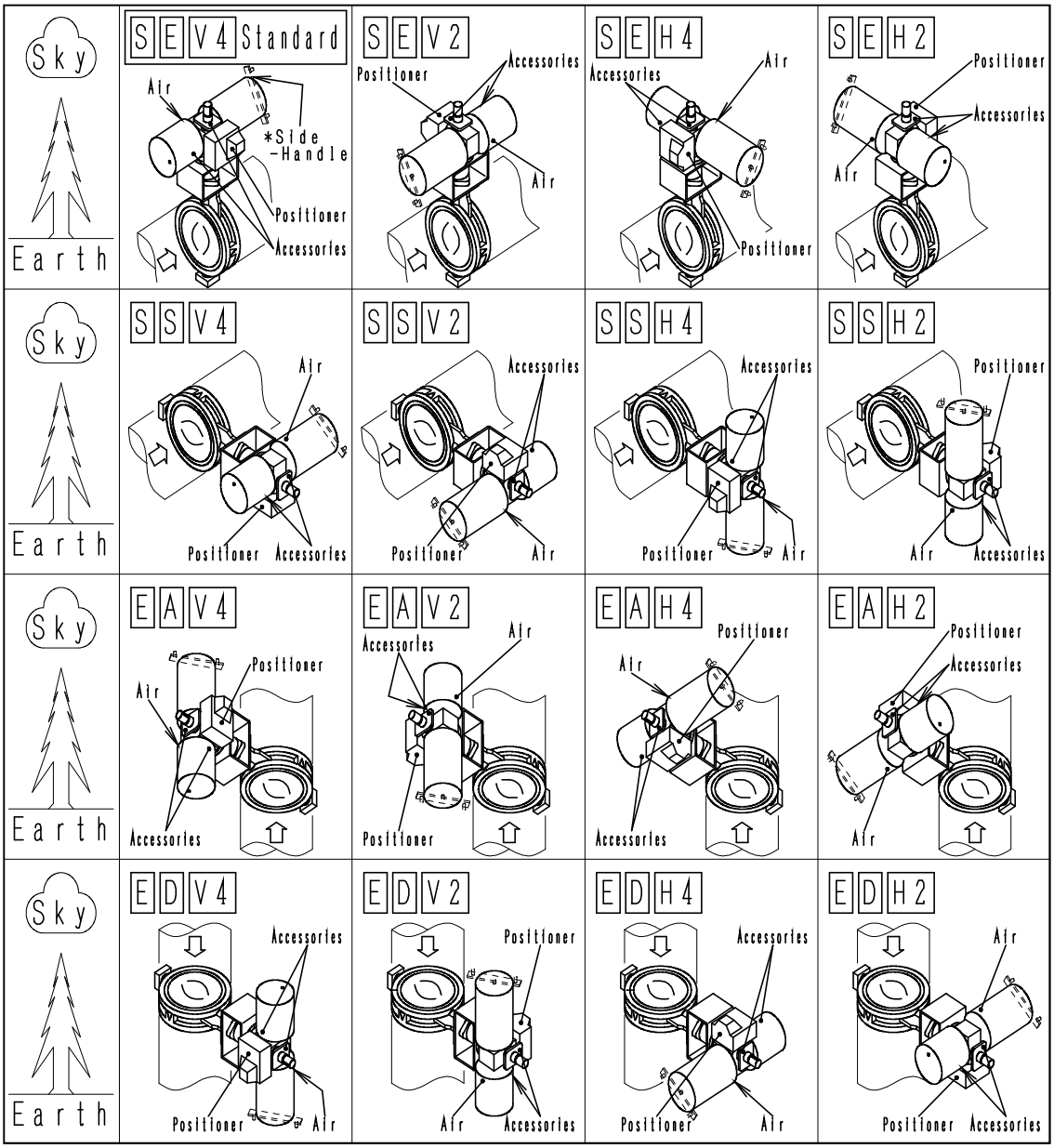

UNIPOWER - Standard Specifications with Accesories -

Types / Spec-Items	NC / NE		NS	
	Double Acting *(NC--)*	**Spring Return** *(NE--S)*	**Double Acting** *(NS--N)*	**Spring Return** *(NS--NS)*
Construction	Scotch Yoke type pneumatic cylinder rotary actuator			
Connection Standards	ISO 5211/1		ISO 5211/1 (upon request)	
	NAMUR to VDI/VDE 3845 available upon request			
Application	On-Off		On-Off	

Materials

Body/Cover	FCD400(Ductile iron)	FCD400(Ductile iron)
Cylinder	FCD400(Ductile iron)	STKM13(Steel pipe)
Shaft	S45C(Steel)/hard chrome plated	S45C(Steel)/hard chrome plated
Piston	AC4C-T6(Aluminum)	A6061-T6(Aluminum)
O-Rings	NBR	NBR
Operating Pressure	Air 0.39MPa / 58psi	Air 0.39MPa / 58psi 0.58MPa / 86psi (Option)
Piping connections	Rc 1/4"	Rc 1/4" for NS-13N(S), Rc 3/8" for NS-17N(S) upto NS-20N(S), Rc 1/2" for NS-28N(S)
Opening range	Rotary On-Off : 0 ～ 93°	Rotary On-Off : 0 ～ 93°
Allowable environmental temperature	-20°C ～ +80°C / -4°F ～ +176°F	-20°C ～ +80°C / -4°F ～ +176°F
Protection rating	Outdoors waterproof (IP55)	Outdoors waterproof (IP55)
Standard painting (incl.Yoke)	Magenta	Magenta

Accessories (*)

Limit switches	1LS(water-proof), 1LX(explosion-proof), VCL(water-proof), VCX(explosion-proof)
Proximity switch	FL7M-10T7D
Solenoid valves	3-way : M00U（water-proof, explosion-proof), 4-way : M15G - M65G(water-proof, explosion-proof)
Positioner	XE151, XE152, XP101, XP102
Air filter regulators	AW3000, AW4000, XR108
Speed controllers	AS4000
Quick exhaust valves	QEV-8, QEV-10, QEV-15, QEV-20
Silencers	AN200, AN300, AN400, AN500
Pressure equalizing valve	DH-12B
Others(*)	Special instructions available for salty environment, extreme cold environment, special air-tubing, special joints, special painting, stainless steel bolts/nuts for outside exposed environment, volume tanks, lock-up valves, etc.

(*) : Option

NC type - Double Acting Actuator

(1) Construction

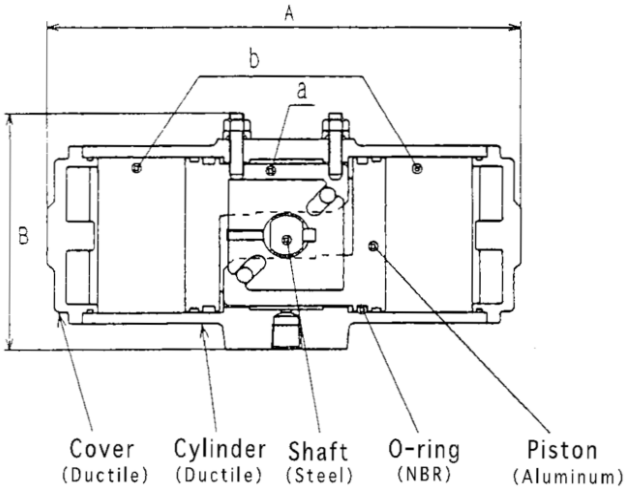

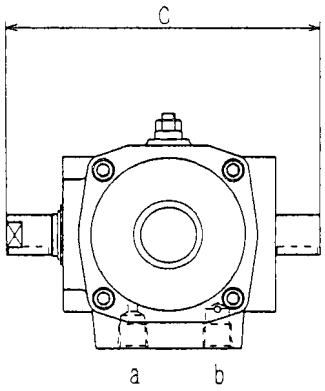

(2) Example of Flow Sheet

On/Off

Solenoid valve electronically not energized : valve close

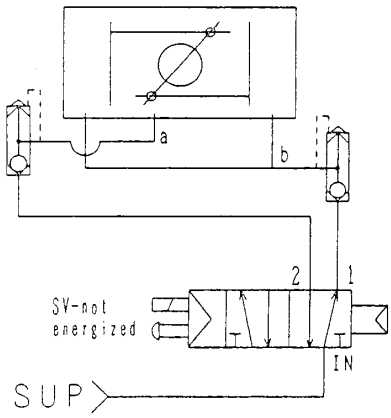

(3) Specifications

Operating Pressure : 0.39MPa / 58psi

Operating Temperature : -20°C ～ +80°C / -4°F ～ +176°F

		Actuator Type No.		
Spec. Items	**(unit)**	***NC092P***	***NC202P***	***NC352P***
Dimensions	**A** (mm)	206	260	320
	B (mm)	107	136	164
	C (mm)	140	170	206
Weight	Kg	6.0	10.5	19.0
Output Torque (at 0.39MPa/58psi)	Nm	82.5	175	319
Cylinder Volume	**a** (liters)	0.38	0.81	1.5
	b (liters)	0.39	0.82	1.5
Air Consumption (at 0.39MPa / 58psi)	liters/cycle	3.85	8.15	15.0
Solenoid Valve	AC	M15G-8-A12PG-T		
	DC	M15G-8-D12PG-T		
Quick Exhaust Valve		-	-	QEV-8(2X)
Nylon Tube	mm	Φ8 x Φ6		
Operation Speed	Seconds	Less than 1 Second		

NS type - Double Acting Actuator

(1) Construction

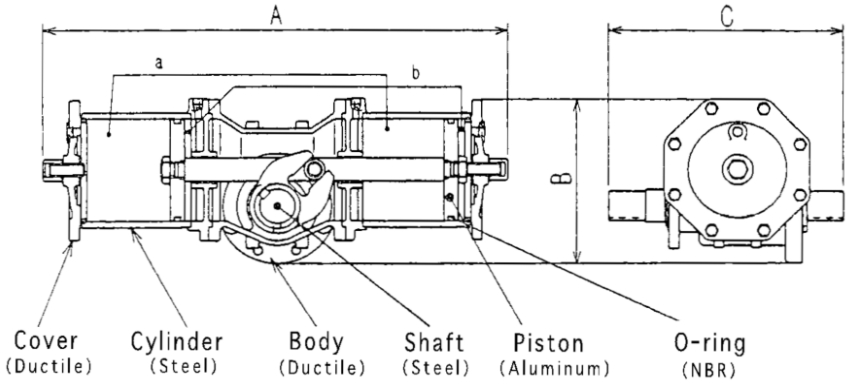

(2) Example of Flow Sheet

On/Off

Solenoid vavle electronically not energized: valve close

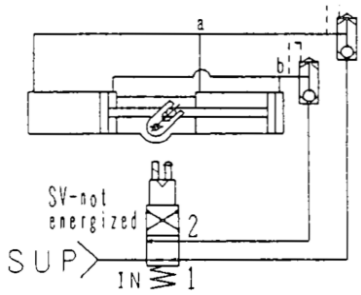

(3) Specifications

Operating Pressure : 0.39MPa/58psi

Operating Temperature : -20°C ～ +80°C / -4°F ～ +176°F

		Actuator Type No.			
Spec. Items	**(unit)**	***NS-13N***	***NS-17N***	***NS-20N***	***NS-28N***
Dimensions	**A** (mm)	610	750	1050	1350
	B (mm)	200	271	347	459
	C (mm)	282	390	460	590
Weight	Kg	43	80	140	270
Output Torque (at 0.39MPa/58psi)	Nm	780	1660	3620	8500
Cylinder Volume	**a** (liters)	3.1	6.7	14.8	34.5
	b (liters)	3.1	6.7	14.8	34.5
Air Consumption (at 0.39MPa/58psi)	liters /cycle	31.0	67.0	148.0	346.0
Air Consumption (at 0.58MPa/86psi)	liters /cycle	43.4	93.8	207.2	484.4
Solenoid Valve	AC	M65G-10-A12PG-T	M65G-15-A12PG-T	M65G-15-A12PG-T	M65G-20-A12PG-T
	DC	M65G-10-D12PG-T	M65G-15-D12PG-T	M65G-15-D12PG-T	M65G-20-D12PG-T
Quick Exhaust Valve		QEV-10(X2)	QEV-15(X4)	QEV-20(X4)	QEV-20(X4)
Nylon Tube (outside dia. X inside dia.)	mm	Φ10 x Φ8	Φ12 x Φ10(2)	Φ15 x Φ12(2)	Φ15 x Φ12(2)
Operation Speed	Seconds	1.0	1.0	2.0(option : 1.0)	3.0(option : 2.0)

NE type - Spring Return Actuator

(1) Construction

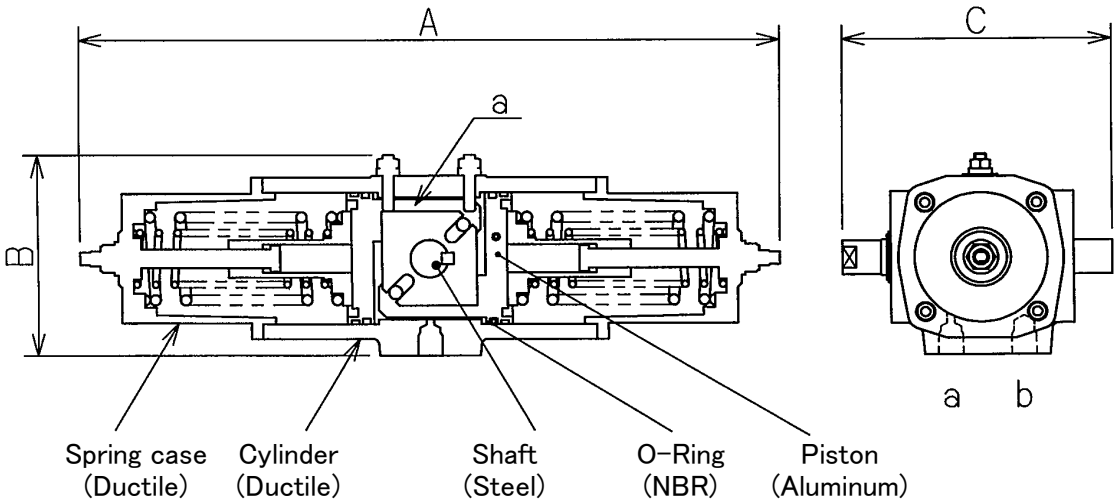

(2) Example of Flow Sheet

On/Off

Solenoid valve electronically not energized: valve close

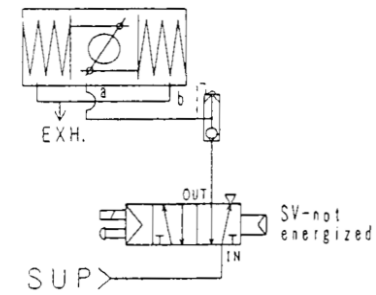

DA(Airless, valve open)

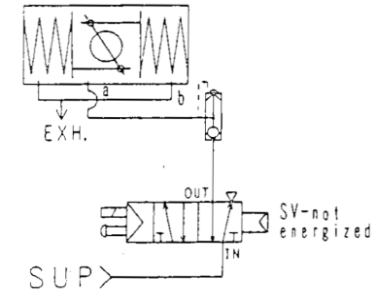

(3) Specifications

Operating Pressure : 0.39MPa/58psi

Operating Temperature : -20°C ～ +80°C / -4°F ～ +176°F

Spec. Items		(unit)	Actuator Type No.		
			NE091S	***NE201S***	***NE351S***
Dimensions		A(mm)	368	476	572
		B(mm)	107	136	164
		C(mm)	140	170	206
Weight		Kg	7.6	14.2	24.6
Output Torque (at 0.39MPa/58psi)	FC	Nm	28	65	120
	FO		38	79	145
Cylinder Volume		liters	0.38	0.81	1.5
Air Consumption (at 0.39MPa/58psi)		liters /stroke	1.9	4.05	7.5
Solenoid Valve		AC	M15G-8-A12PG-T		
		DC	M15G-8-D12PG-T		
Quick Exhaust Valve			-	-	QEV-8
Nylon Tube (outside dia. X inside dia.)		mm	Φ8 x Φ6		
Function Speed		Seconds	to be consulted to us.		

NS type - Spring Return Actuator

(1) Constructior

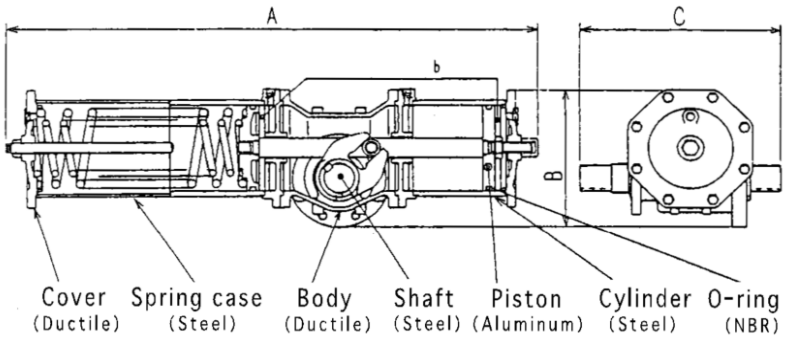

(2) Example of Flow Sheet

FC Function(Air Failure Valve Close)

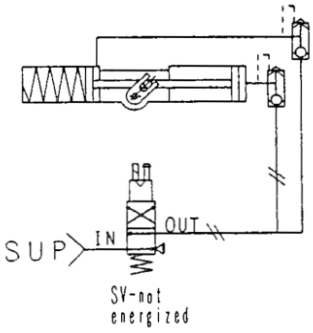

FO Function(Air Failure Valve Open)

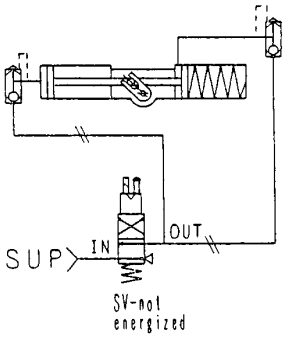

(3) Specifications

Operating Pressure : 0.39MPa / 58psi

Operating Temperature : -20°C ～ +80°C / -4°F ～ +176°F

		Actuator Type No.			
Spec Items	**(unit)**	***NS-13NS***	***NS-17NS***	***NS-20NS***	***NS-28NS***
Dimensions	A(mm)	865	983	1412	1828
	B(mm)	200	271	347	459
	C(mm)	282	390	460	590
Weight	Kg	58	107	190	390
Output Torque (at 0.39MPa/58psi)	Nm	270	620	1370	3630
Cylinder Volume	a(liters)	-	-	-	-
	b(liters)	3.1	6.7	14.8	34.6
Air Consumption (at 0.39MPa/58psi)	liters /stroke	15.5	33.5	74.0	173.0
Solenoid Valve	AC	M65G-10-A12PG-T	M65G-15-A12PG-T	M65G-15-A12PG-T	M65G-20-A12PG-T
	DC	M65G-10-D12PG-T	M65G-15-D12PG-T	M65G-15-D12PG-T	M65G-20-D12PG-T
Quick Exhaust Valve		QEV-10(X2)	QEV-15(X2)	QEV-20(X2)	QEV-20(X2)
Nylon Tube (outside dia. x inside dia.)	mm	Φ10 x Φ8	Φ12 x Φ10	Φ15 x Φ12	Φ15 x Φ12
Function Speed	Seconds	to be consulted to us.			

Instructions for piping

■ Cautions before Installation

(1) Welding spatter and other foreign matters in the piping line may cause damage on the seat and resulting higher torque: they must be thoroughly flushed.

(2) On the UNIFLOW body there is an arrow mark(→) to indicate the recommended flow direction. The valve should be installed as follows:-

Higher pressure side when valve is closed → **Lower pressure side when valve is closed**

(3) Wafer Type UNIFLOW obtain correct sealing by tightening the flange bolts for piping of the Insert-ring side. If the piping flanges are not placed the fluid can not be shut off.

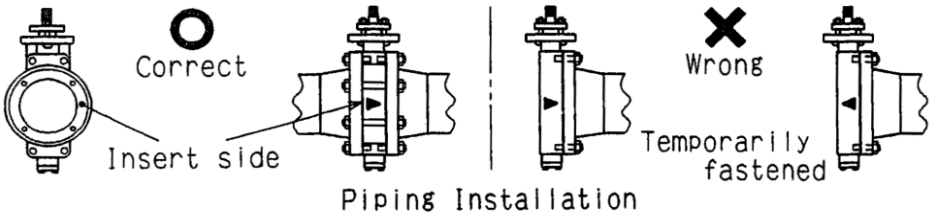

■Change of the Installation positions of actuators

Consult us. For details, refer to our Maintenance Manual A90-0073-2.

■Recommended Flow Direction

UNIFLOW seals the fluids bi-directionally, we however, recommend you to use in our recommended flow direction as illustrated hereunder, you will then have the following advantages:-

(1) Much less seat wear; meaning **Longer Sealing Life**.

(2) The fluid will not contact the sealing surface of the seat, also **Longer Seat Life**.

(3) Lighter start-up torque; meaning **Lower in Cost** by selecting more economical(smaller) Actuators

(4) As it seals the fluids at the seat, the fluid pressure will not affect the gland sealing part directly; meaning **Longer Sealing Life of the Gland packings**.

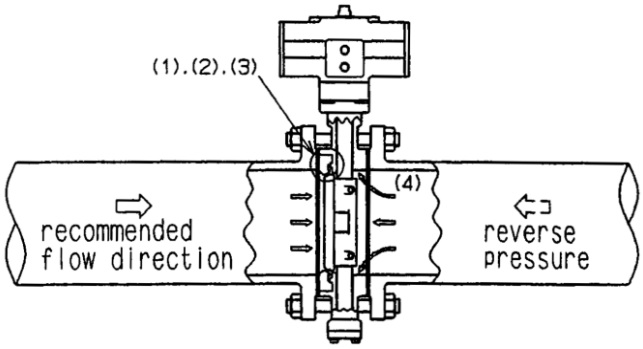

■Maintenance Manual

To serve you with our UNIFLOW as long as possible, ask us for further documents; Regular Check-List Manual (A90-1023) and Maintenance Manual (A90-0073-1,2,3)

Maintenance and Seal Kits of UNIFLOW(Standard Type)

(For details, ask us for "UNIFLOW Maintenance Manual for PSA-application" separately.)

Seat and Seal Replacement

Seat replacement can be done very easily and quickly without disassembling the shaft and disc.

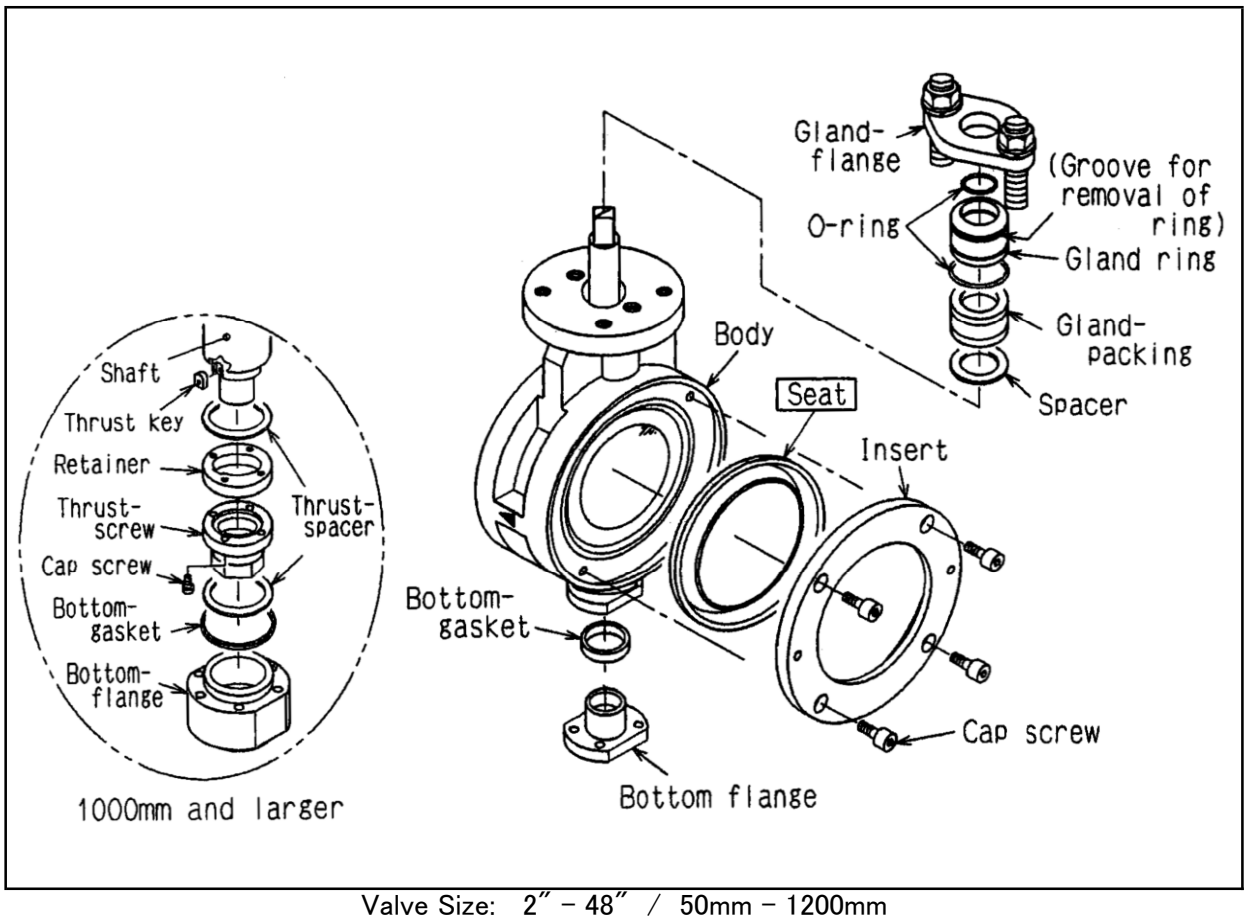

Valve Size: 2" - 48" / 50mm - 1200mm

Seal Kits

Parts Name	Shape	Material	Quantity/Valve
Seat		R-PTFE ot PTFE	1
Gland packing		PTFE	1set
Bottom gasket		PTFE	1
Gland O-ring		NBR	1
Gland O-ring		NBR	1

Maintenance and Seal Kits of UNIFLOW(Anti-VibrationType)

(For details, ask us for "UNIFLOW Maintenance Manual for PSA-application" separately.)

Seat and Seal Replacement

Seat replacement can be done very easily and quickly without disassembling the shaft and disc.

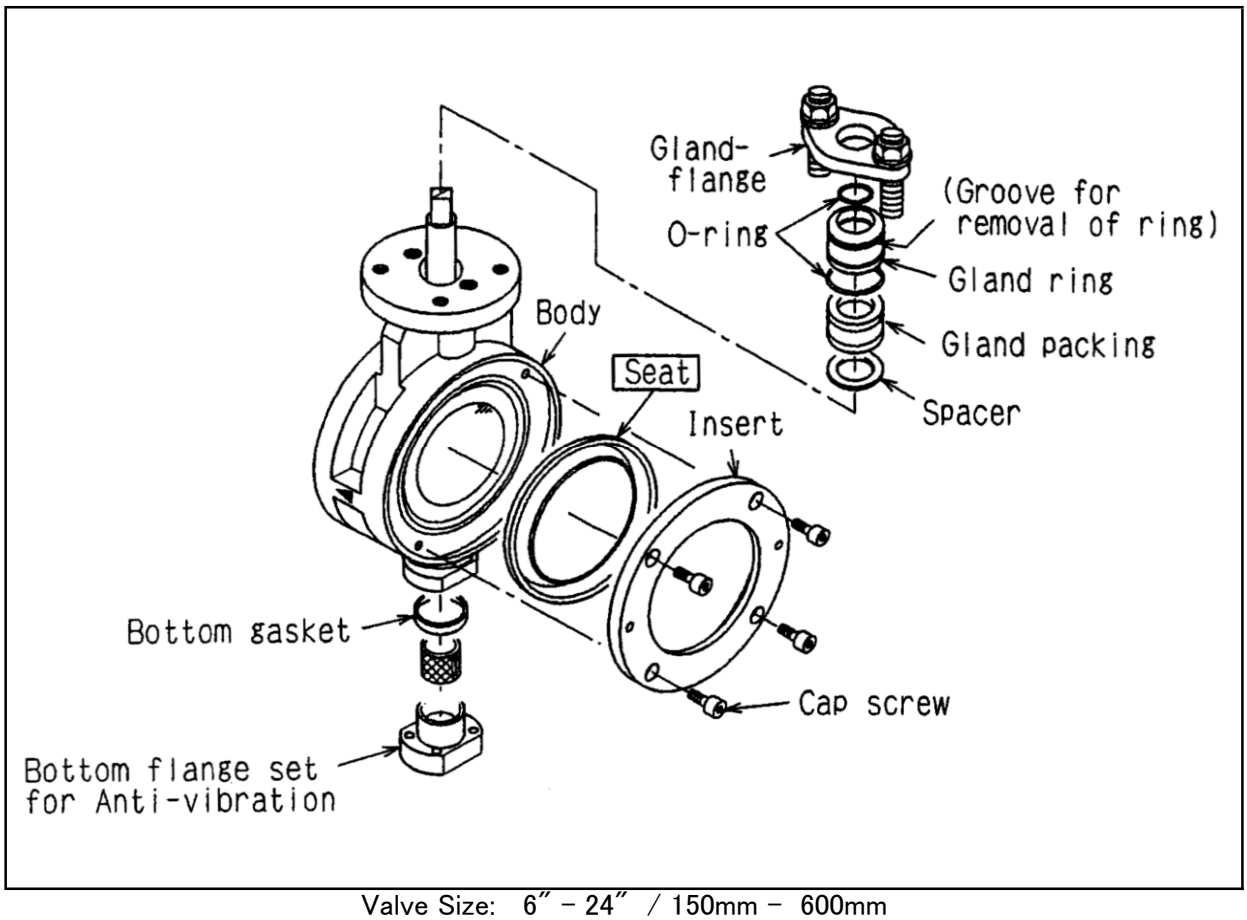

Valve Size: 6″ - 24″ / 150mm - 600mm

Seal Kits

Parts Name	Shape	Material	Quantity/Valve
Seat		R-PTFE ot PTFE	1
Gland packing		PTFE	1set
Bottom gasket		PTFE	1
Gland O-ring		NBR	1
Gland O-ring		NBR	1
Bottom flange set for Anti-Vibration type		304ss	1 set

How to order UNIFLOW for PSA (Product Code No.)

Code No.: Size ① ② ③ ④ ⑤ ⑥ ⑦ ⑧ - ⑨

Example: 22 3U 150 03 36 36 T T R - 3

The above example is for Valve size 22"(DN550); Wafer type, ANSI Class 150, FCD400-body, SUS316-disc, 316SS-shaft, PTFE-seat, PTFE-seal, Anti-Vibration with R.PTFE bottom spacer, and UNIPOWER(NS-type pneumatic double acting actuator).

	Size	
	inch	mm
2	2	50
2,5	2,5	65
3	3	80
4	4	100
5	5	125
6	6	150
8	8	200
10	10	250
12	12	300
14	14	350
16	16	400
18	18	450
20	20	500
22	22	550
24	24	600
26	26	650
28	28	700
30	30	750
32	32	800
34	34	850
36	36	900
40	40	1000
44	44	1100
48	48	1200

①	**Body Type** (Connection)
3U	Wafer type
3L	Lugged type

②	**Rating**
10	JIS 10K
150	ANSI Class 150

③	**Body material**
03	FCD400

④	**Disc material**
34	SCS13A
36	SCS14A

⑤	**Shaft material**
34	SUS304 (14"~)
36	A276-316 (~12") SUS316 (14"~)

⑥	**Seat material**
T	PTFE

⑦	**Seal material**
T	PTFE

⑧	**Option**
S	Standard type
R	with R.PTFE Bottom Spacer
T	Anti-Vibration type
RT	Anti-Vibration type with R.PTFE Bottom Spacer

⑨	**Actuator**
0	Bare shaft
1	Hand Lever
2	Manual Gear
3	UNIPOWER (Double Acting)
4	UNIPOWER (Spring Return)

ROTARY CONTROL VALVE

UNIFLØW

for PSA/VSA

As Switching Valves for PSA/VSA Application
Standard Type and Anti-Vibration Type

Warranty

1. Warranty

NBS undertakes to replace or repair at its cost, ex-works an NBS certified workshop:

a. Any product which is found to have defective workmanship through design or manufacture.

b. Any product which fails in service provided that the NBS installation, operation and maintenance specification and procedures manual has been followed.

2. Term of warranty

The warranty is valid for a period of 12 months after commissioning or 18 months from delivery ex-works the NBS factory, whichever occurs sooner.

3. The following products shall be excluded from the warranty.

Any valve delivered as a bare shaft valve without an NBS actuator.

a. Failures attributed to actuators or related accessories not installed by NBS.

b. Failures as a result of a process, other machine or piece of equipment.

NBS CORPORATION

234 Kuwaki, Oyama-cyo, Sunto-gun, Shizuoka
410-1315, Japan

Authorized Representative in Europe
BM TECH sp. z o.o.
03-978 Warszawa
ul. Ateńska 10/15
POLAND
Tel. +48 22 616 03 88
www.bmtech.eu
biuro@bmtech.eu